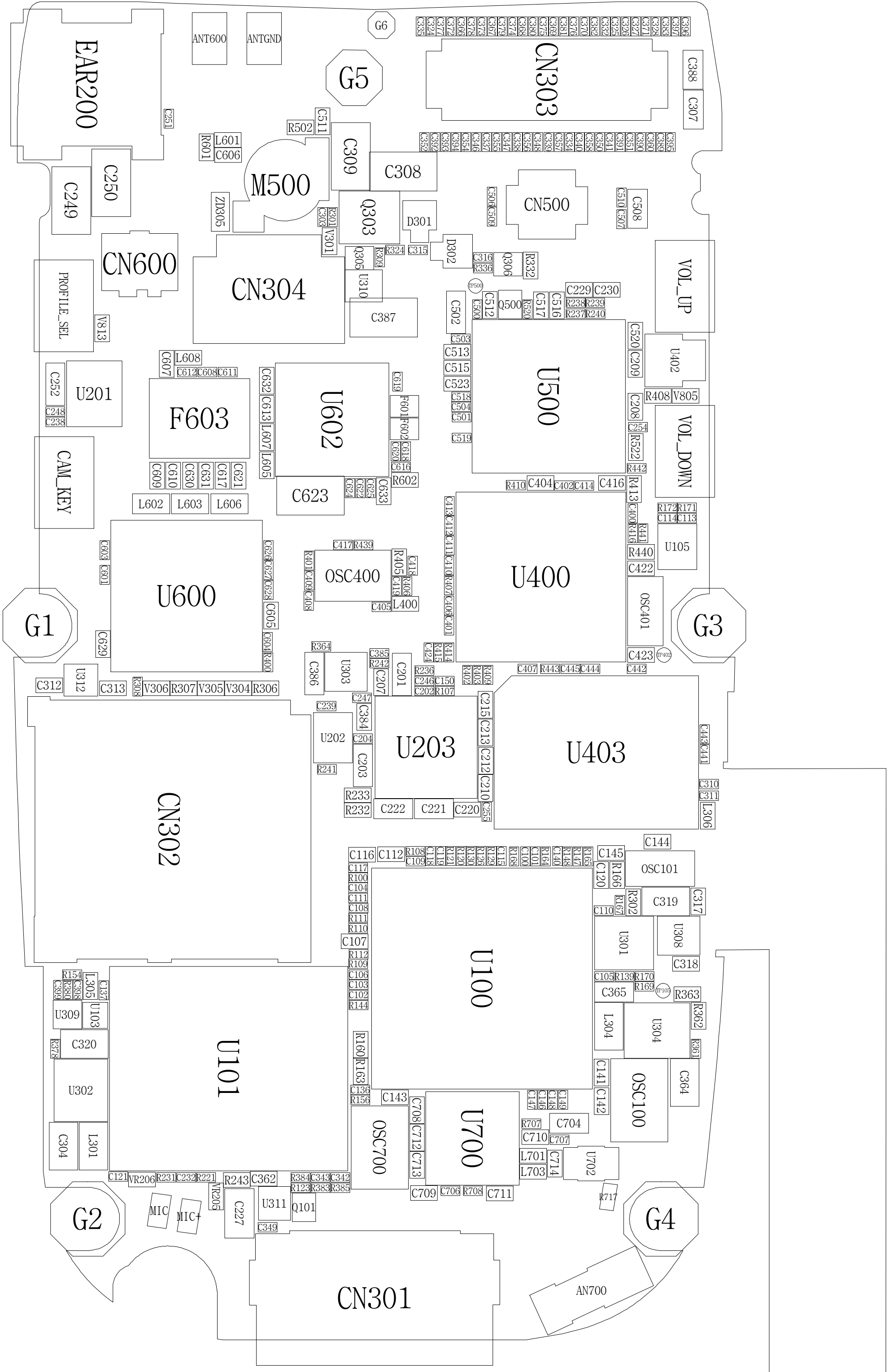
EAR200
ANT600
ANTGND
G6
G5
CN303
C388
C307
C251
R502
C511
R601
L601
C606
C309
C308
M500
C250
C249
ZD305
R301
C303
V301
Q303
D301
C506
C509
CN500
C510
C507
C508
CN600
CN304
R324
C315
D302
C316
R336
Q306
R332
VOL_UP
PROFILE_SEL
V813
Q305
R309
U310
C387
TP500
C229
C230
R238
R239
R237
R240
C512
C500
Q500
R520
C517
C516
C502
C503
C513
C515
C523
C518
C504
C501
C519
U500
C520
C209
U402
R408
V805
C208
C254
R522
R442
VOL_DOWN
C607
L608
C612
C608
C611
U201
C252
C248
C238
F603
C632
C613
L607
L605
U602
C619
F601
F602
C618
C620
C616
R602
C633
C623
C624
C622
C625
C609
C610
C630
C631
C617
C621
L602
L603
L606
CAM_KEY
R410
C404
C402
C414
C416
R413
C400
R416
R441
R440
C422
R172
R171
C114
C113
U105
C413
C412
C411
C410
R407
C406
C401
U400
C417
R439
R405
C418
R406
C419
OSC400
R401
C409
C408
C405
L400
C603
C601
C626
C627
C628
C605
C604
R400
U600
G1
C629
OSC401
G3
C423
TP402
R364
C385
R242
C386
U303
C207
C201
R236
C246
C150
C202
R107
R414
C424
R415
R402
R403
R409
C407
R443
C445
C444
C442
C312
U312
C313
R308
V306
R307
V305
V304
R306
C247
C384
C239
U202
C204
C203
R241
U203
C215
C213
C212
C210
C255
U403
C443
C441
C310
C311
L306
R233
R232
C222
C221
C220
CN302
C144
C116
C112
R108
C109
C118
C119
R121
R120
R130
R126
R129
C115
R168
C100
C101
R164
C140
R148
R147
R165
C145
C120
R166
OSC101
C117
R100
C104
C111
C108
R111
R110
C107
R302
R167
C319
C317
C110
U301
U308
C318
U100
R112
R109
C106
C103
C102
R144
C105
R139
R170
R169
TP103
C365
R363
R154
L305
C137
C399
R380
C398
U309
U103
L304
U304
R362
R361
C320
R378
R160
R163
U101
C141
C142
OSC100
C364
U302
C136
R156
C143
C708
C712
C713
U700
C147
C146
C148
C149
C704
R707
C710
C707
OSC700
C304
L301
L701
L703
C714
U702
C121
VR206
R231
C232
R221
R243
C362
R384
C343
C342
R123
R383
R385
VR205
C227
U311
Q101
C349
C709
C706
R708
C711
R717
G2
MIC
MIC+
G4
CN301
AN700

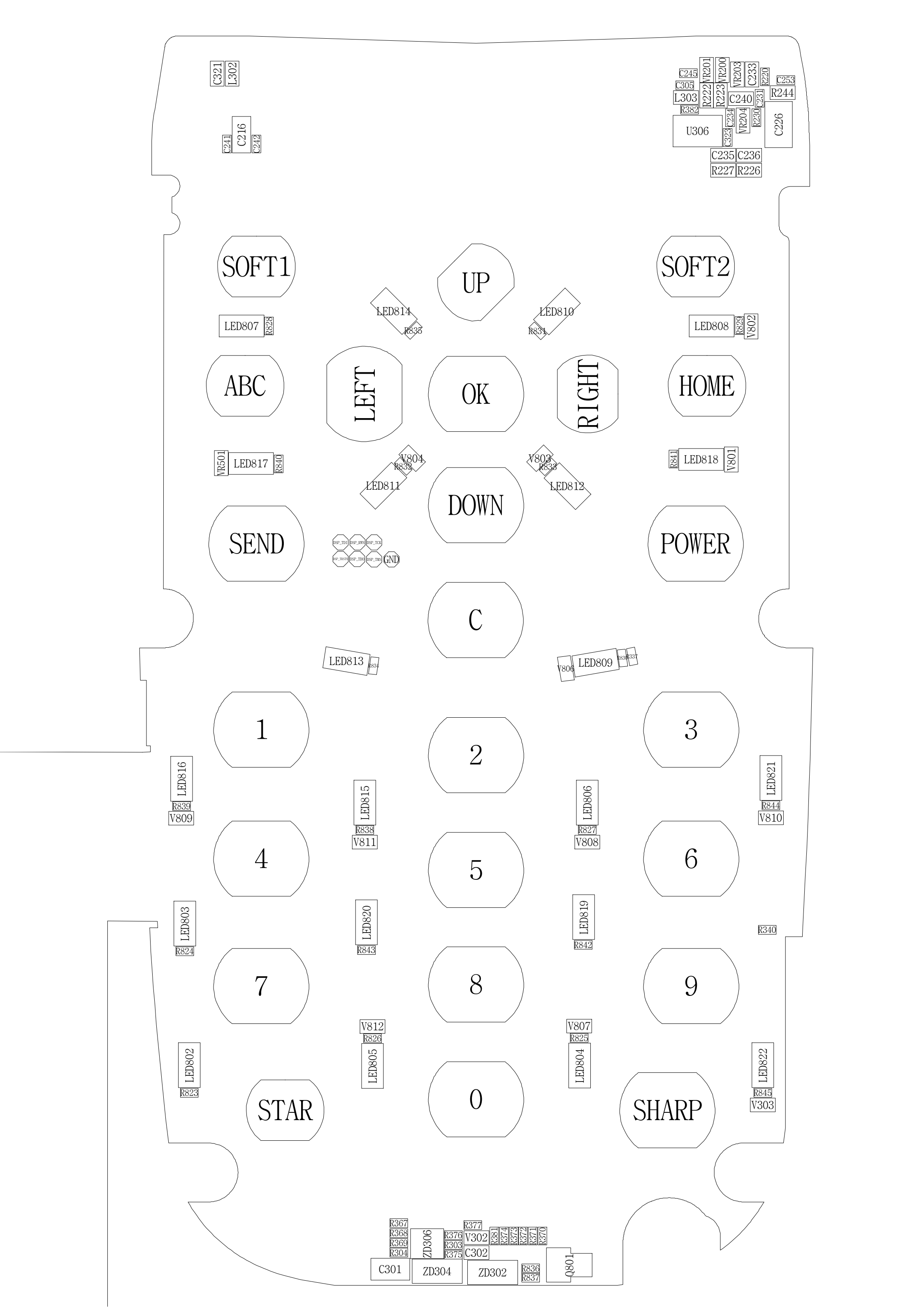
C321
L302
C241
C216
C242
C245
VR201
VR200
VR203
C233
R220
C253
C305
R222
R223
R244
L303
C240
C231
R382
C234
VR204
R230
C226
U306
C323
C235
C236
R227
R226
SOFT1
UP
SOFT2
LED814
LED810
LED807
R828
R835
R831
LED808
R829
V802
ABC
LEFT
OK
RIGHT
HOME
VR501
LED817
R840
V804
R832
V803
R833
R841
LED818
V801
LED811
LED812
DOWN
SEND
DSP_TDI
DSP_RWN
DSP_TCK
DSP_TRSTN
DSP_TDO
DSP_TMS
GND
POWER
C
LED813
R834
V806
LED809
R836
R337
1
2
3
LED816
R839
V809
LED815
R838
V811
LED806
R827
V808
LED821
R844
V810
4
5
6
LED803
R824
LED820
R843
LED819
R842
R340
7
8
9
V812
R826
V807
R825
LED802
R823
LED805
LED804
LED822
R845
V303
STAR
0
SHARP
R367
R368
R369
R304
ZD306
R376
R303
R375
R377
V302
C302
R381
R374
R373
R372
R371
R370
C301
ZD304
ZD302
R836
R837
Q801

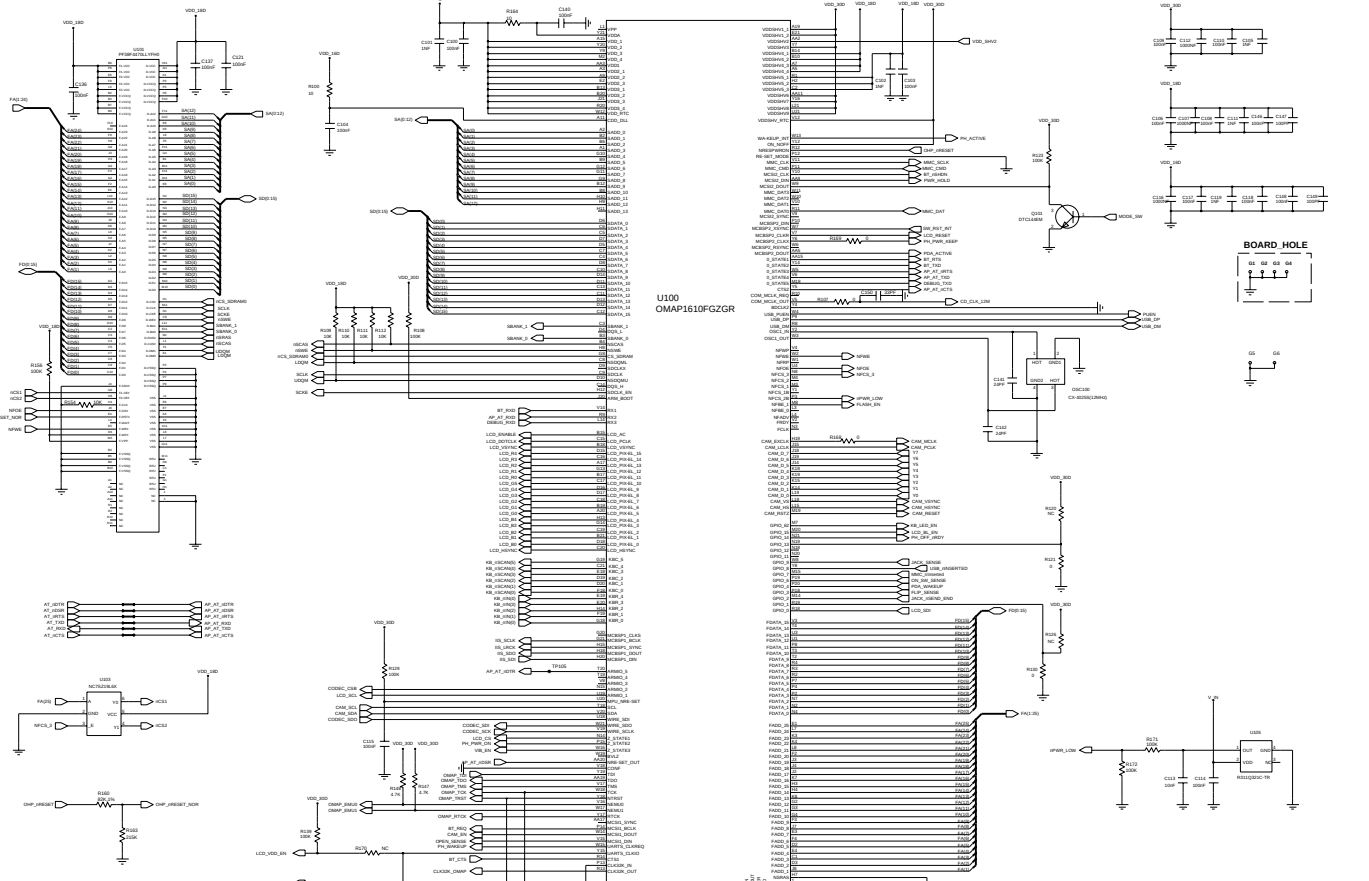
U100
OMAP1610FGZGR
BOARD_HOLE
G1 G2 G3 G4
SAMSUNG ELECTRONICS
94-1 IMADO DONG GUM CITY
KOREA
SGH-D730_Rev11

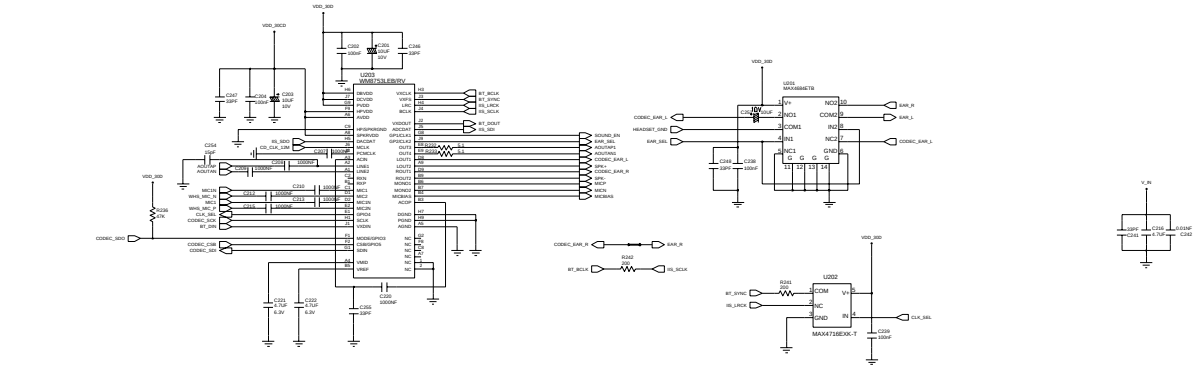

Audio Codec

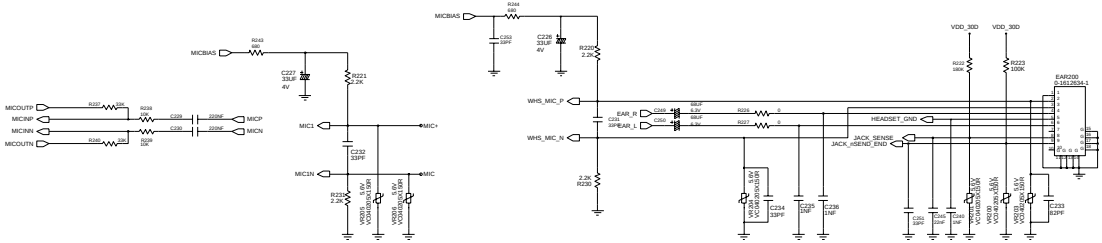

MIC

Audio Jack

Engineer	C.H.YOON	SAMSUNG ELECTRONICS 94-1 IMSEOO DONG GUAM CITY KOREA	
Drawn by	C.H.YOON		
R&D CHK	S.G.KIM	TITLE	Size A4
SQA L.T.TE CHK		SGH-D730_Rev11	
SPD PMOS CHK			
QA CHK			

Changed by	Date Changed	Time Changed	Rev	Drawing Number	Sheet
user9	2005.05.14	2 at 10:18:24	1.1		2 of 8

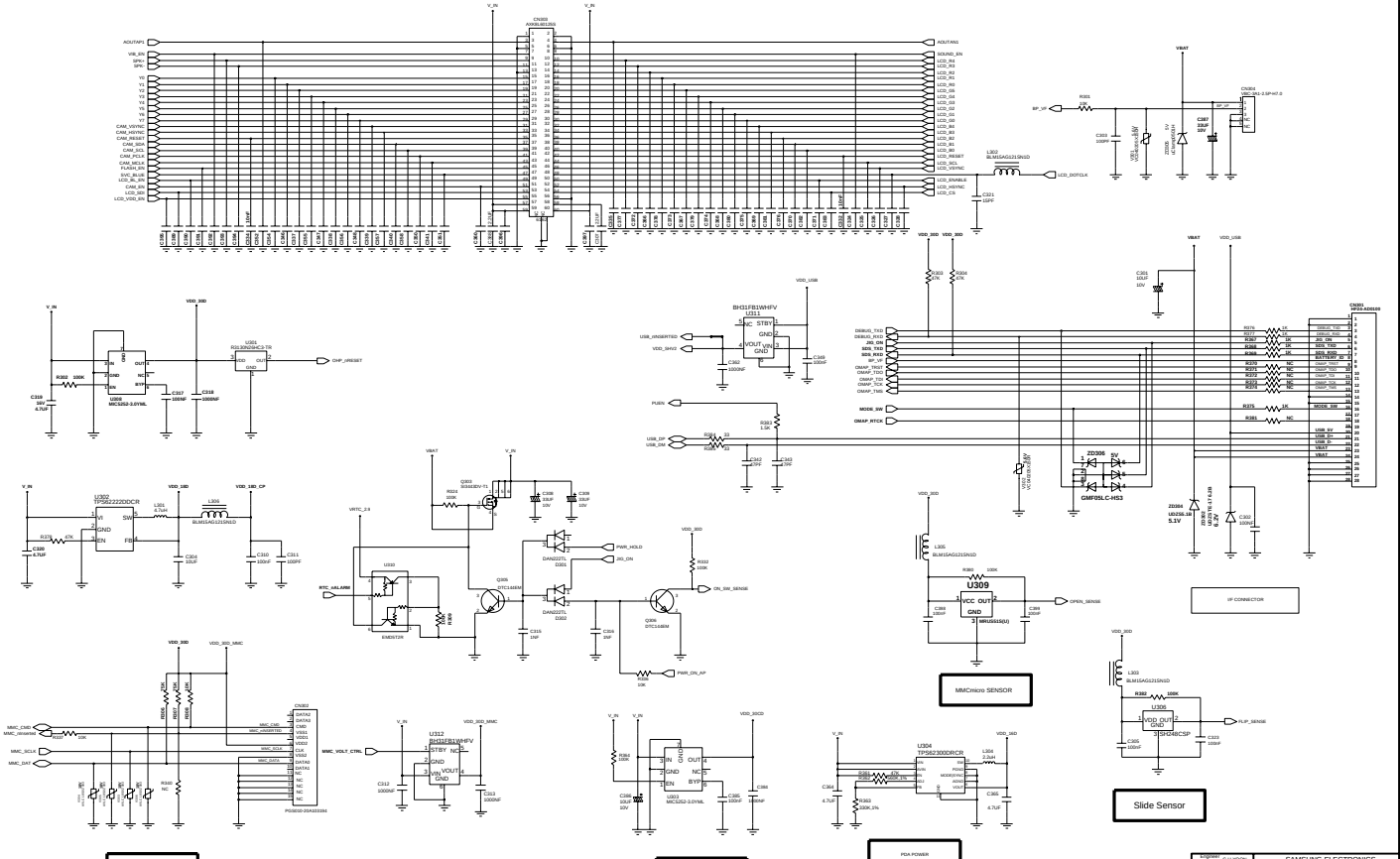
CN300
ADDR.BELOW
ADUTAP1
VSB_EN
VSB_DET
SPK
V1
V2
V3
V4
V5
V6
V7
V8
CAM_VSYNC
CAM_HSYNC
CAM_RESET
CAM_MCLK
CAM_SCL
CAM_PCLK
CAM_MCLK
FLASH_EN
SVC_BLUE
LCD_BL_EN
CAM_EN
LCD_EN
LCD_VDD_EN
ADUTAN1
SOUND_EN
LCD_R3
LCD_R2
LCD_R1
LCD_R0
LCD_G5
LCD_G4
LCD_G3
LCD_G2
LCD_G1
LCD_G0
LCD_B4
LCD_B3
LCD_B2
LCD_B1
LCD_B0
LCD_RESET
LCD_SCL
LCD_VSYNC
LCD_ENABLE
LCD_HSYNC
LCD_CS
LCD_DOTCLK
L302
BLM15AG121SN1D
C321
10PF
BP_UP
R301
C303
100PF
VBAT
CN304
VBC-3R1-2.1SP-H7.0
C307
10UF
16V
ZD305
5V
V_IN
VDD_33D
R302 100K
C319
4.7UF
U301
R1130N294C3-TR
DVP_RRESET
C317
100NF
C318
1000NF
U308
MIC5352-3.0VML
U302
TPS62222DDCR
L301
4.7UH
L304
BLM15AG121SN1D
VDD_18D
VDD_18D_CP
R275
47K
C320
4.7UF
C304
10UF
C310
100NF
C311
100PF
VRTC_2.8
U310
EMD57ZR
R309
R314
200K
Q303
SI3441DV-T1
C308
10UF
10V
C309
10UF
10V
DAN222TL
D301
DAN222TL
D302
PWR_HOLD
3G_ON
Q305
DTC143EM
Q306
DTC143EM
R312
100K
ON_SW_SENSE
C315
1NF
C316
1NF
R308
10K
PWR_ON_AP
RTC_VOLLAPMI
VDD_33D
VDD_33D_MMC
R404
R405
R406
R401
R407
R408
MMC_CMD
MMC_clockSD
MMC_SCLK
MMC_DAT
MMC_VOLT_CTRL
CN302
DATA2
DATA3
CMD
VSS1
VDD1
VDD2
CLK
VSS2
DATA0
DATA1
NC
PS3820-20A0331N4
U312
BH31FB1WHFV
STBY
GND
VOUT
C312
1000NF
C313
1000NF
MMC/micro
VDD_33D
VDD_33D
R302
100K
C305
10UF
10V
U303
MIC5352-3.0VML
C306
10UF
C304
CODEC POWER
U304
TPS62300DRCR
L304
2.2UH
R363
330K,1%
C364
4.7UF
C365
4.7UF
PDA POWER
U309
VCC
OUT
GND
BH15AS15(U)
L305
BLM15AG121SN1D
R380 100K
C389
100NF
C390
100NF
OPEN_SENSE
MMC/micro SENSOR
VDD_33D
L303
BLM15AG121SN1D
R382 100K
U306
VDD1
OUT
GND
3SPK246CSP
C395
100NF
C323
100NF
FLIP_SENSE
Slide Sensor
VDD_33D
VDD_33D
R303
47K
R304
47K
VDD_USB
BH31FB1WHFV
U311
STBY
GND
VOUT
C360
1000NF
C349
1000NF
USB_VBUSENTSD
VDD_3AV2
PUEN
R317
1.5K
R301
33
R302
33
C342
33PF
C343
33PF
USB_DP
USB_DM
DMBUG_TXD
DMBUG_RXD
JIG_ON
SDS_TXD
SDS_RXD
BP_UP
DMAP_TXD
DMAP_RXD
DMAP_TXE
DMAP_TXS
DMAP_TXD
MODE_SW
OMAP_RTCK
VDD_USB
C301
10UF
10V
CN303
FPC-ADD0100
R276 1K
R277
R367 1K
R368 1K
R369 1K
R370 NC
R371 NC
R372 NC
R373 NC
R375 1K
R381 NC
DMBUG_TXD
DMBUG_RXD
JIG_ON
SDS_TXD
SDS_RXD
BATTERY_ID
DMAP_TXD
DMAP_RXD
DMAP_TXE
DMAP_TXS
DMAP_TXD
MODE_SW
USB_5V
USB_DP
USB_DM
VBAT
VBAT
ZD306
5V
GMF05LC-HS3
ZD304
UDZ5.1B
5.1V
ZD303
UDZ6.8B
6.8V
C302
100NF
VDD_USB
VDD_33D
IF CONNECTOR
SAMSUNG ELECTRONICS
M-1 IMSCO SONG GUM CITY
KOREA
Engineer C.H. YOON
Drawn by C.H. YOON
R&D CHK S.E.KIM
S.C.L.C TE CHK
MFG Admin CHK
QA CHK
TITLE
SGH-D730_Rev11
REV 1.1
Drawing Number
Sheet 3 of 8
Changed by
Date Changed 2005.05.14
Time Changed

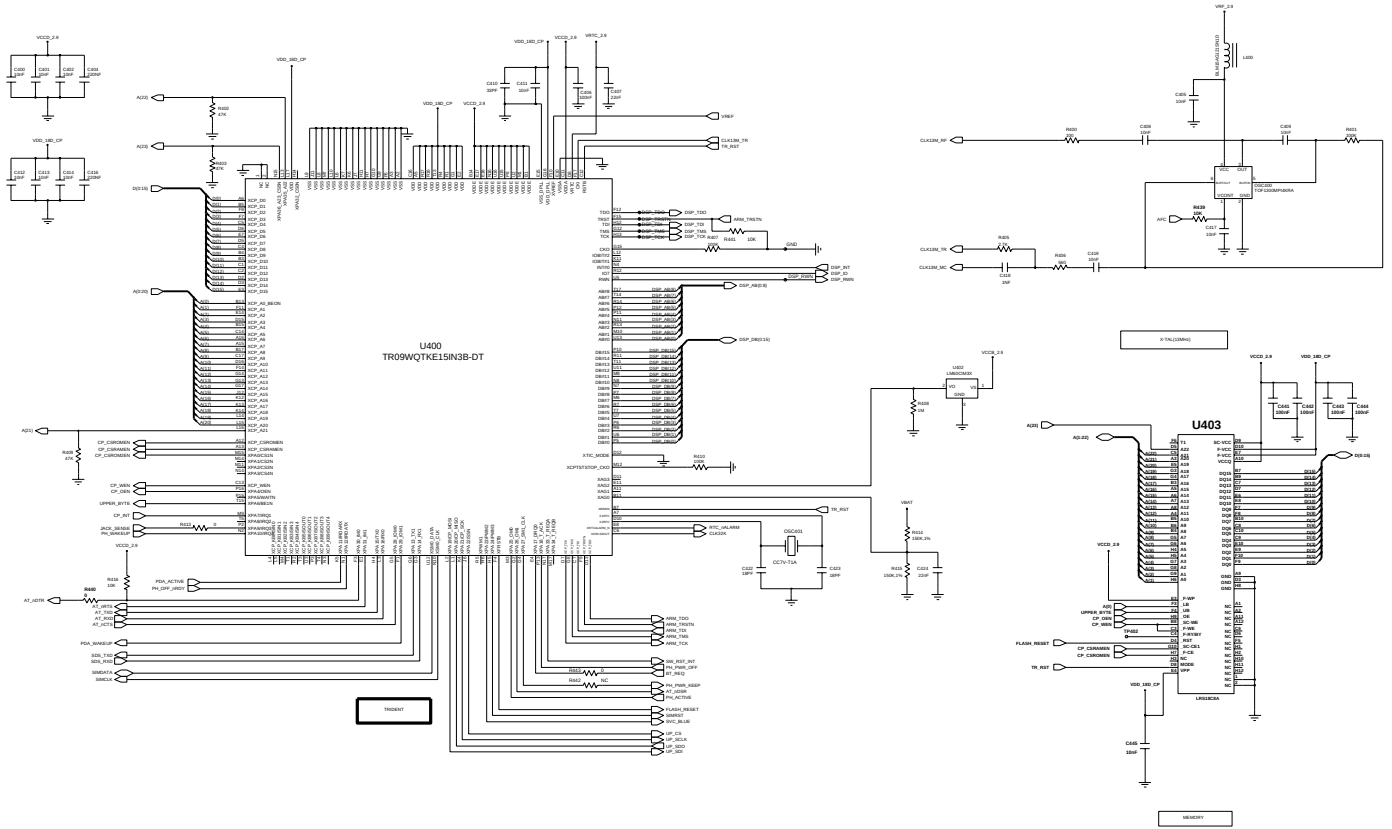
U400
TR09WQTKE15IN3B-DT
U403
LRS1363A
X-TAL(19MHz)
TRIDENT
MEMORY
SAMSUNG ELECTRONICS
Engineer C.H.YOON
Drawer by C.H.YOON
R&D CHK S.E.KIM
S.C.L.I.TE CHK
SPD & MECH CHK
QA CHK
SGH-D730_Rev10
Changed by user9
Date Changed 2005.05.14
Time Changed 10:09:32 am
Sheet 4 of 8

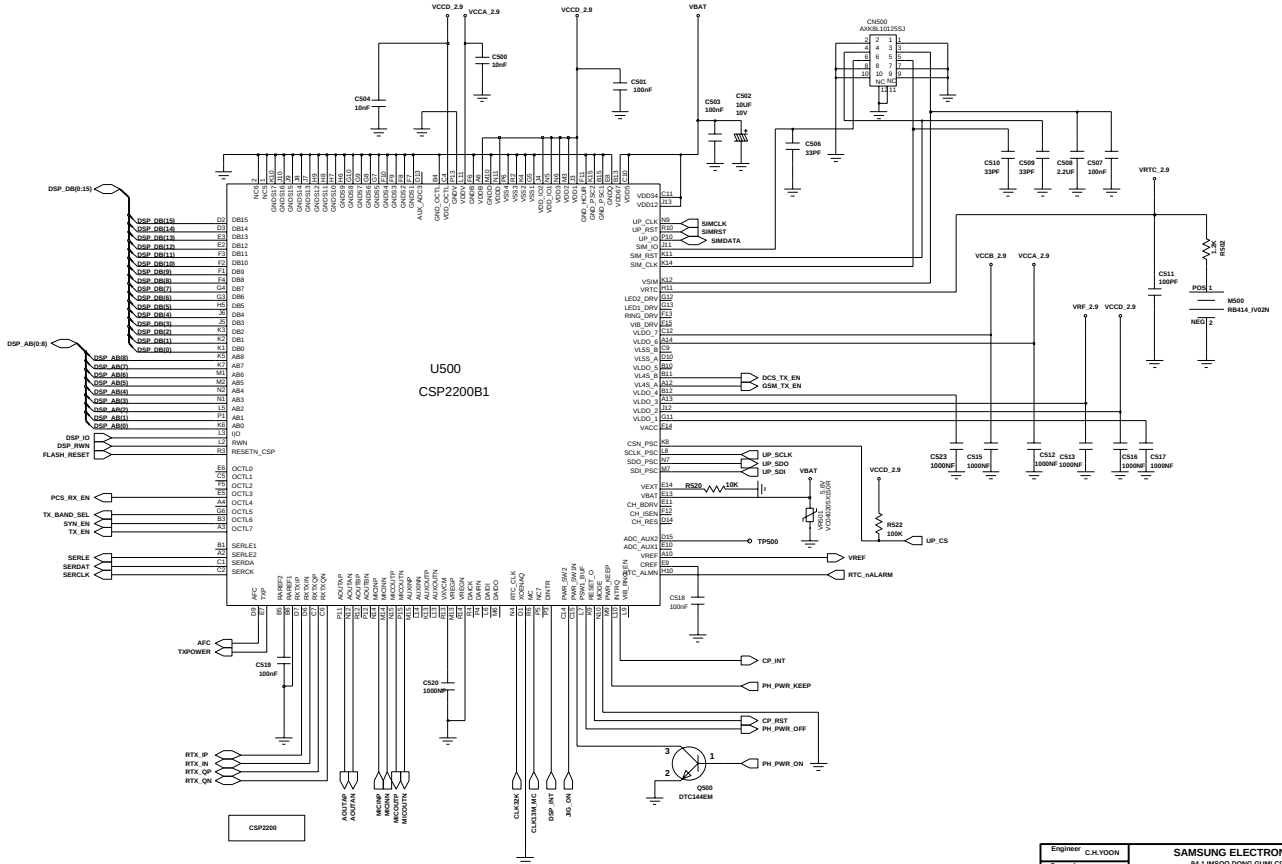

Changed by user8	Date Changed 2005.05.14	Time Changed 10:05:34 am	QA CHK	REV 1.0	Drawing Number

Engineer	C.H.YOON	SAMSUNG ELECTRONICS 94-1 IMSOO DONG GUMI CITY KOREA
Drawn by	C.H.YOON	
R&D CHK	S.E.KIM	TITLE: SGH-D730_Rev10
DOC CTRL CHK		Size A3
MFG ENGR CHK		Sheet 5 of 8

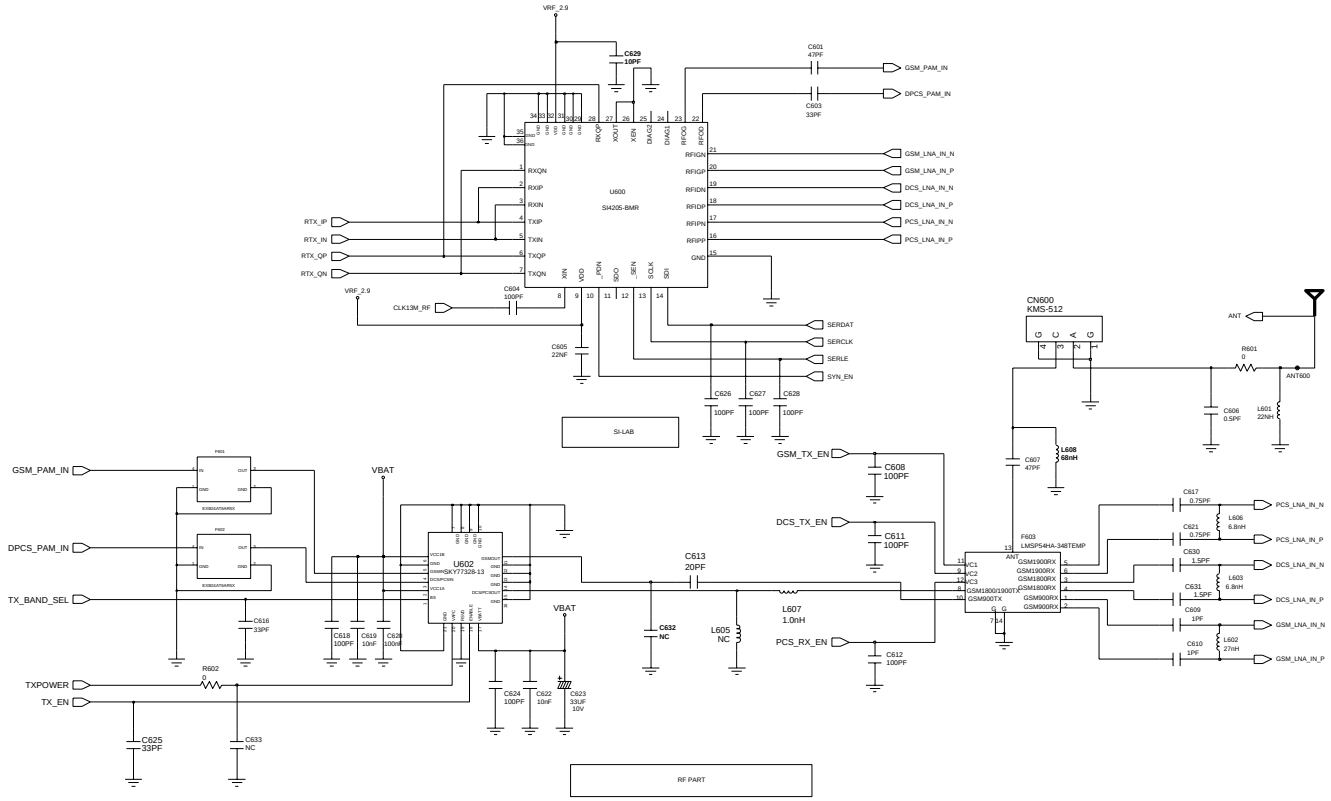

Engineer C.H.YOON	SAMSUNG ELECTRONICS 94-1 IMSOO DONG GUMI CITY KOREA		
Drawn by C.H.YOON			
R&D CHK S.E.KIM		Size A3	
DOC CTRL CHK	SGH-D730_Rev10		
MFG ENGR CHK			
Changed by user8	Date Changed 2005.05.14	Time Changed 10:06:43 am	QA CHK
REV 1.0	Drawing Number	Sheet 6 of 8	

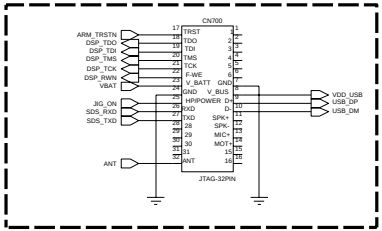

TRIDENT JTAG

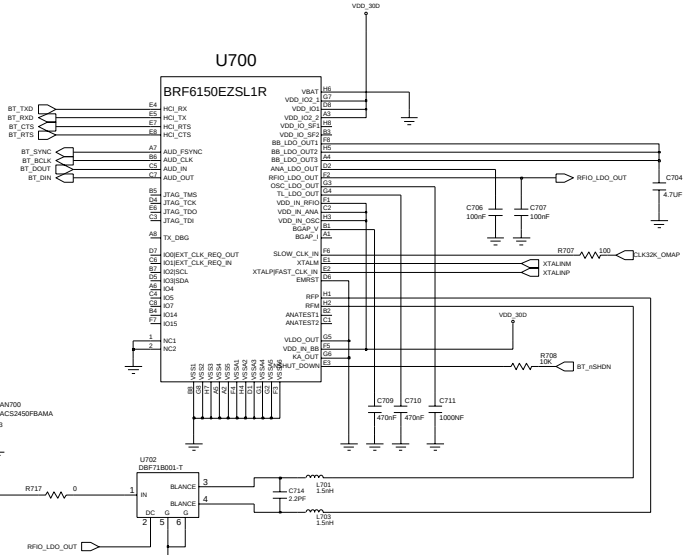

BLUETOOTH

Engineer	C.H.YOON	SAMSUNG ELECTRONICS 94-1 IMSOO DONG GUMI CITY KOREA	
Drawn by	C.H.YOON		
R&D CHK	S.E.KIM		Size A3
DOC CTRL CHK		SGH-D730_Rev10	
MFG ENGR CHK			

Changed by	Date Changed	Time Changed	QA CHK	REV	Drawing Number	Sheet
user8	2005.05.14	10:25:17 am		1.0		7 of 8

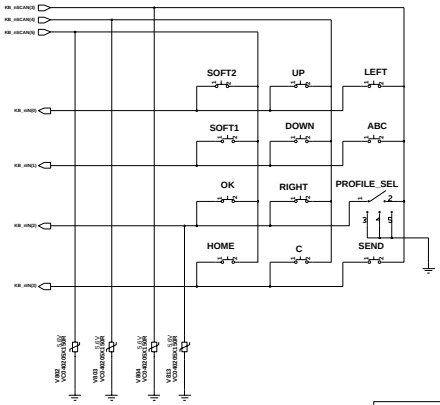
KB_nSCAN[3]
KB_nSCAN[4]
KB_nSCAN[5]
KB_nIN[0]
KB_nIN[1]
KB_nIN[2]
KB_nIN[3]
SOFT2
UP
LEFT
SOFT1
DOWN
ABC
OK
RIGHT
PROFILE_SEL
HOME
C
SEND
V102
V103
V104
V105

KEY MATRIX

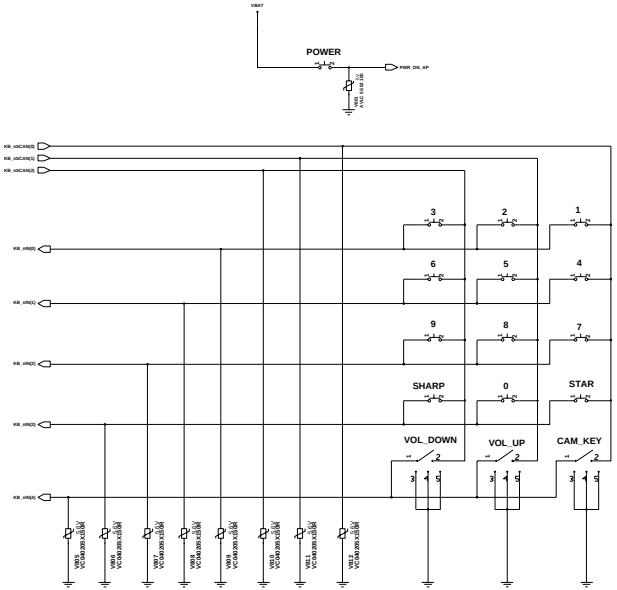
VBAT
POWER
PWR_ON_AP
KB_nSCAN[3]
KB_nSCAN[4]
KB_nSCAN[5]
KB_nIN[0]
KB_nIN[1]
KB_nIN[2]
KB_nIN[3]
KB_nIN[4]
KB_nIN[5]
3
2
1
6
5
4
9
8
7
SHARP
0
STAR
VOL_DOWN
VOL_UP
CAM_KEY

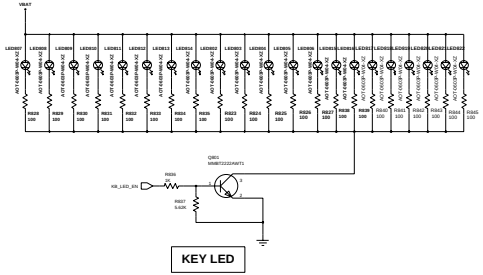
VBAT
LED802
LED803
LED804
LED805
LED806
LED807
LED808
LED809
LED810
LED811
LED812
LED813
LED814
LED815
LED816
LED817
LED818
LED819
LED820
LED821
LED822
LED823
LED824
LED825
LED826
LED827
LED828
LED829
LED830
LED831
LED832
LED833
LED834
LED835
LED836
LED837
LED838
LED839
LED840
LED841